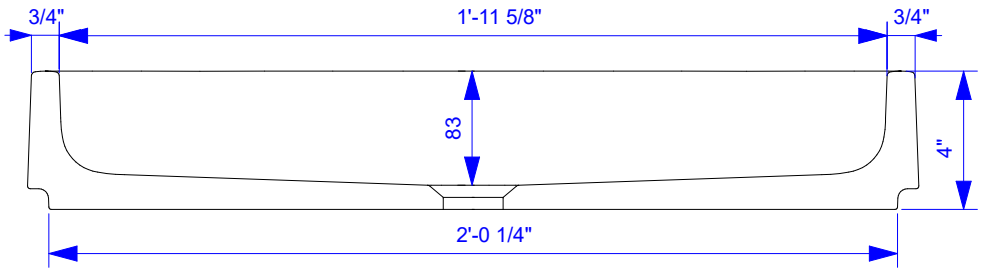

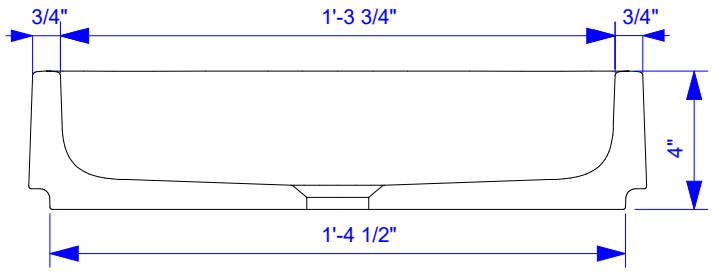

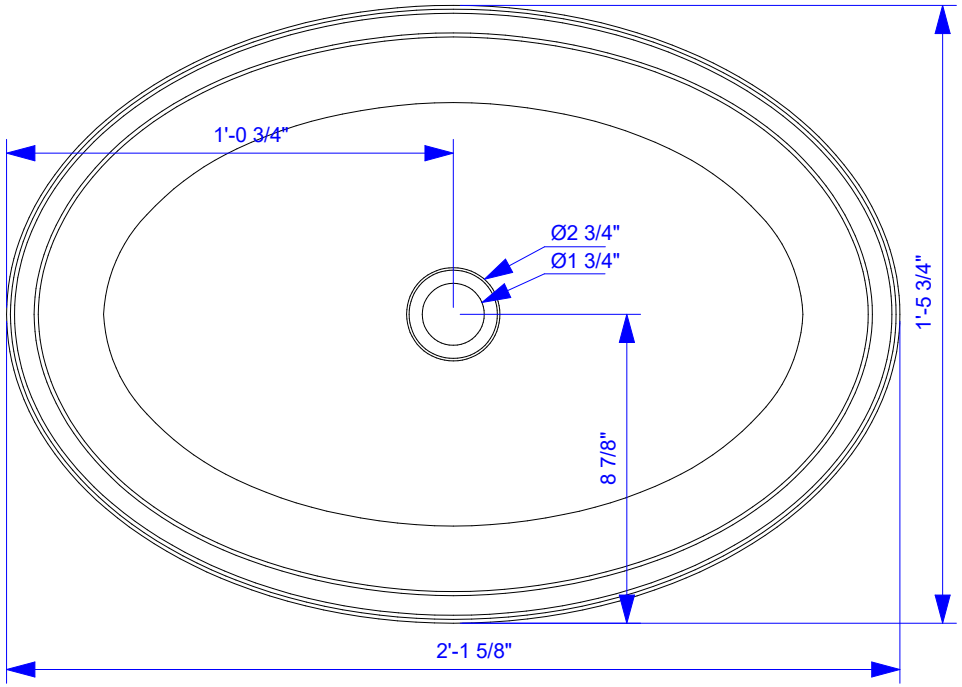

DRAWN OLEG DIODOROV	2020-23-01	aquatica PLUMBING			
CHECKED		TITLE	Solace Oval Sink by Aquatica		
QA					
APPROVED					
		SIZE C		DWG NO	REV
		SCALE			SHEET 1 OF 1