CANAAN WALL HUNG TOILET

6LPF / 1.6GPF OR 3LPF / 0.8GPF

☐ **5780CFW** Tank Carrier and Bowl Kit

SEPARATE COMPONENTS (REQUIRED TO ORDER SEPARATELY)

☐ **FB-110W** White Push Button
☐ **FB-110MC** Matte Chrome Push Button
☐ **FB-110C** Chrome Push Button

PRODUCT SPECS

- 6Lpf / 1.6Gpf or 3Lpf / 0.8Gpf
- HDPE tank and durable coated steel frame up to 400kg (880lbs) load capacity
- 2″ x 4″ In Wall Carrier System
- Vitreous china skirted bowl
- Adjustable carrier height to range 15¾″ (400mm) to 17″ (430mm) bowl rim height (*Carrier can be adjusted to 17″ Plus Height for greater comfort)
- Smooth close and quick removal seat included
- 3″ PVC waste outlet included
- Water surface: 5″ x 4″ (127mm x 100mm)

DIMENSIONS

Wall Hung Bowl:

350mm W x 543mm D x 364mm H

13¾″ W x 21⅜″ D x 14⅜″ H

DIMENSIONS (CONT'D)

Tank Carrier:

590mm W x 90mm D x 1127 to 1277mm H

23¼″ W x 3″ D x 44⅜″ to 50¼″ H

COMPLIANCE CERTIFICATIONS

Meets or exceeds the following:

- IAPMO cUPC
- ASME A112.19.2 / CSA B45.1
- ASME A112.6.2
- CSA B45.15 / ASME A112.19.5
- US EPA WaterSense
- MaP Tested 800g

SHIPPING

Wall Hung Bowl:

Cube	3.01
GW	64 lbs

Tank Carrier:

Cube	3.8
GW	39 lbs

NOTES: Important: Dimensions of fixtures are nominal and may vary within the range of tolerances established by ANSI standard A112.19.2. These measurements are subject to change or cancellation. No responsibility is assumed for use of superseded or voided pages.

WALL HUNG BOWL - SIDE VIEW:

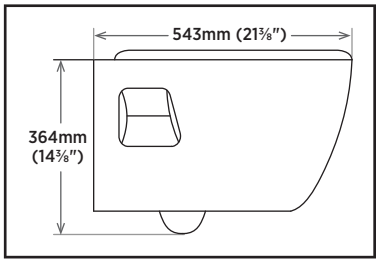

WALL HUNG BOWL - BACK VIEW:

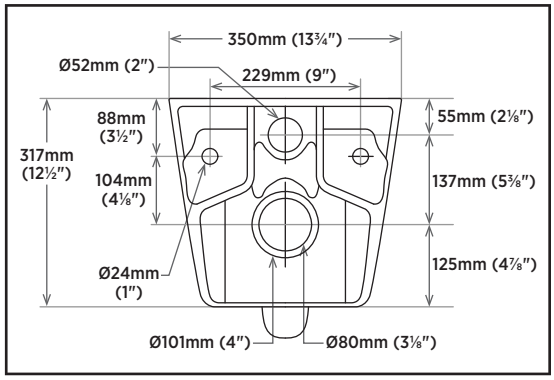

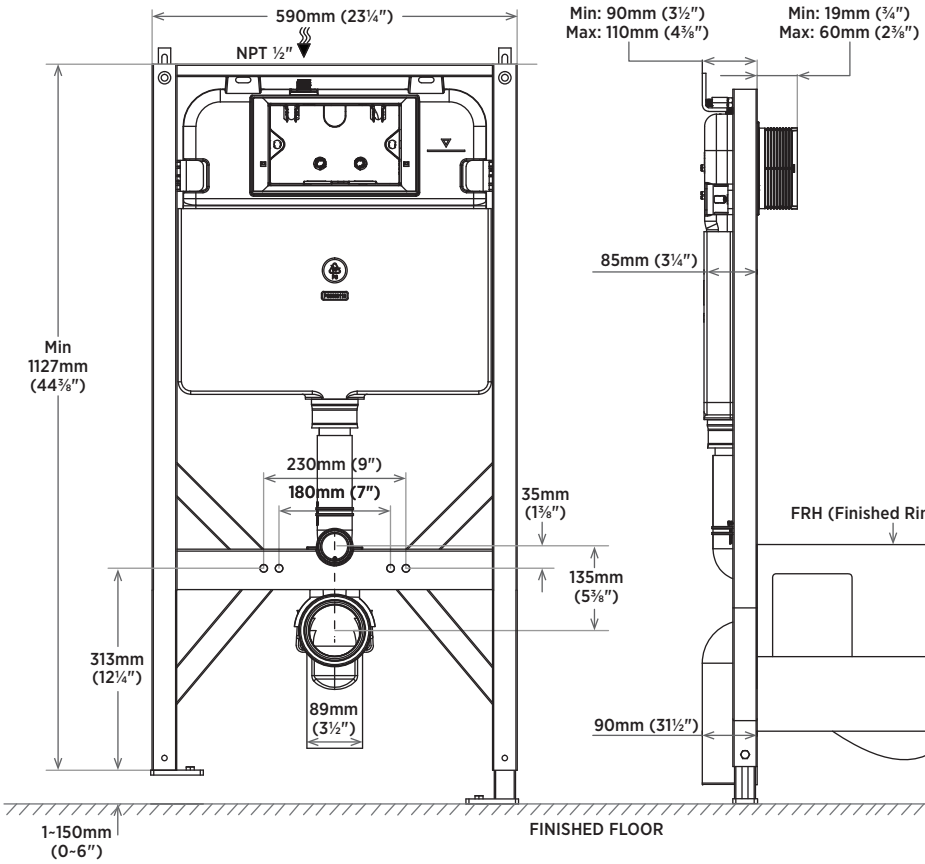

NOTE: To install the bowl as 17″ Plus Height or over molding, the tank carrier leg needs to be adjusted by extending it 30mm (1¼″) longer.

REVISED APRIL 2020