Queen R1075

Widespread Lav

Available Finishes
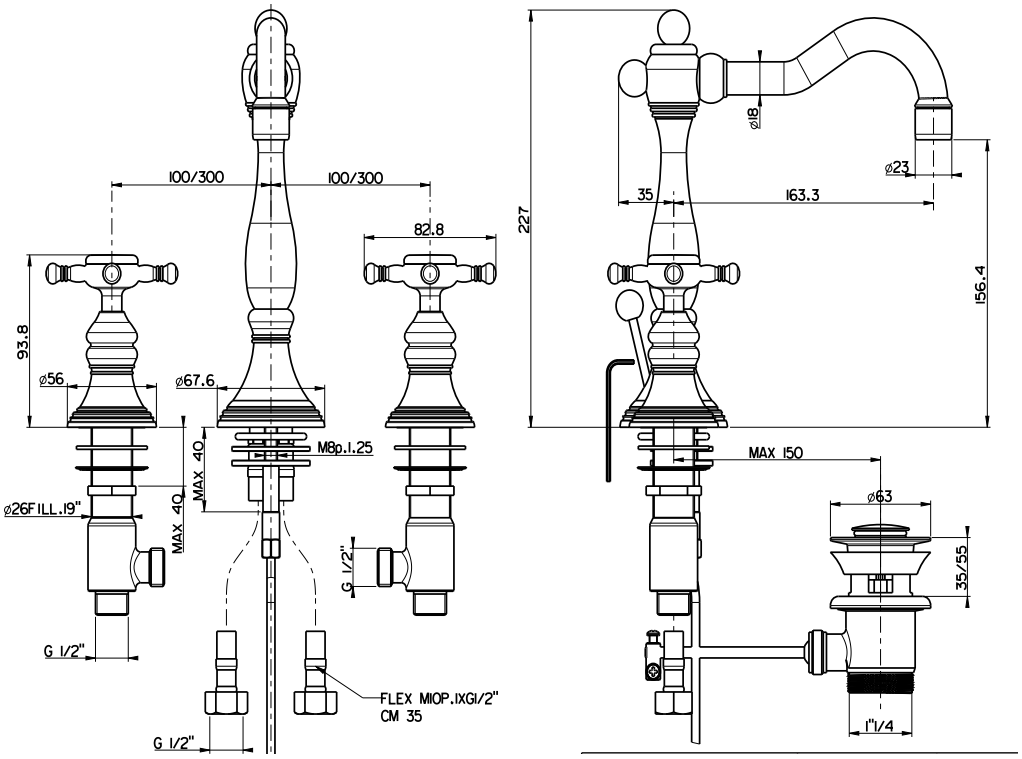
- Chrome
- Brushed Nickel
- Poished Nickel