REGENT R9024L

1/2" Thermostatic Valve with Shut off

Available Finishes

- Chrome w/ black handle
- Chrome w/ white handle

- Brushed Nickel w/ black handle
- Brushed Nickel w/ white handle
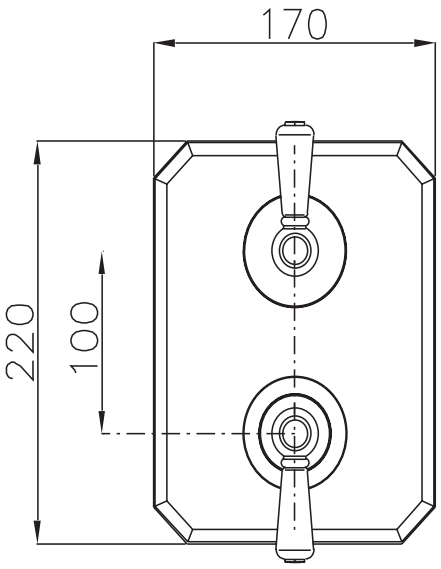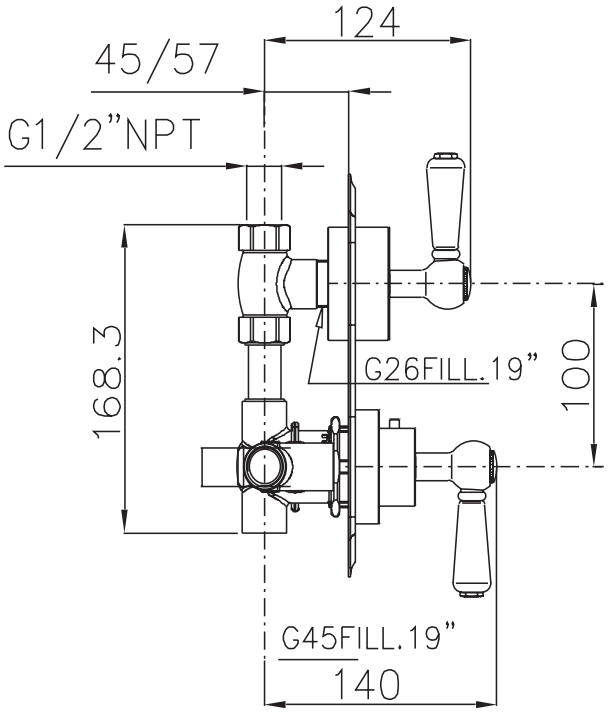
- Poished Nickel w/ black handle
- Poished Nickel w/ white handle