1MNVLNBRD

Specifications

SINGLE CONTROL LAVATORY SET

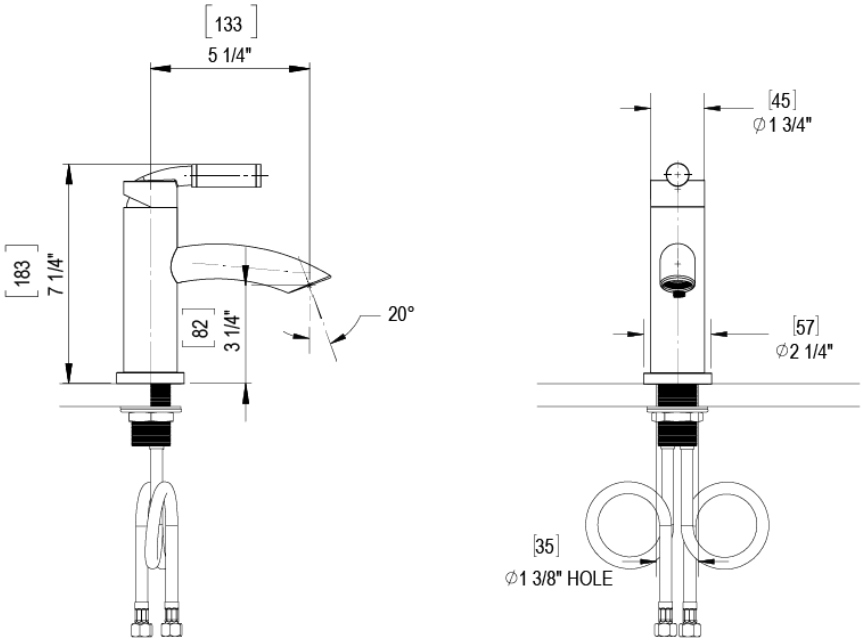

Tel: 905-851-6780
Fax: 905-851-8031
Toll Free: 800-461-5901