8JNMLRDA2

Specifications

SINGLE CONTROL MINI KITCHEN FAUCET WITH RETRACTABLE DUAL FUNCTION SPRAY

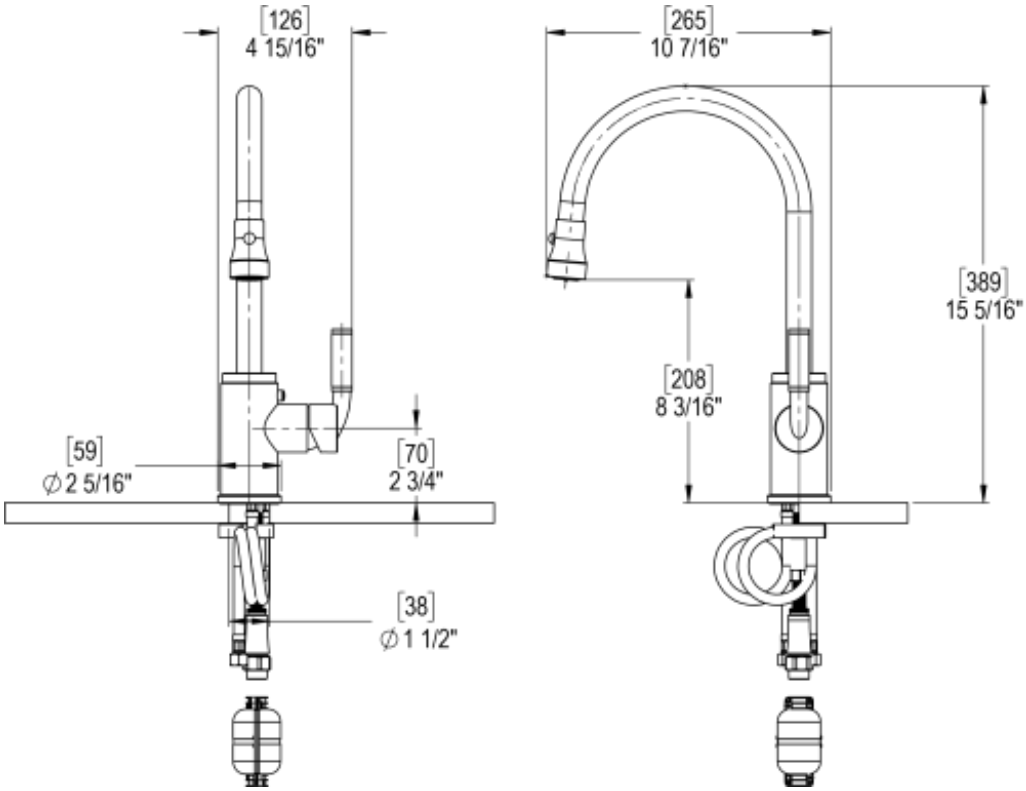

Tel: 905-851-6780
Fax: 905-851-8031
Toll Free: 800-461-5901